CIP Composites™



Self-Lubricating Bearing & Wear Materials

Product Catalog

www.cipcomposites.com

Columbia Industrial Products

Established in 1998



Columbia Industrial Products (CIP Composites™), founded in 1998 in Eugene, Oregon, is a manufacturer and global supplier of custom self-lubricating composite bearing materials. CIP recognized the demand for textile reinforced composites that provide high strength, low coefficient of friction, easy machine ability, and custom sizes with fast deliveries. CIP is proud to offer these solutions, along with personalized customer support to its clients, serving a broad range of industries around the world.

Mission & Vision

To build and nurture sustainable, honest relationships with our employees, customers, distributors and suppliers, providing exceptional customer service and the highest quality material performance.

We strive to be the dominant player for the diversified markets in which we design, manufacture, distribute and supply high quality, reliable laminate composite materials; to exceed our customer's expectations by providing superior customer service and honest relationships with a high level of integrity.

Global Distribution Support

Our global distribution lines are strategically placed throughout the world to better support customers regionally. Our established distributors are highly reputable and well known in their industries. Columbia Industrial Products works closely with our distributors to provide customers with exceptional service and support of CIP Composites.

We are always looking for new distributors to partner with; if you are interested we want to hear from you.

Short Lead Times

Custom sizes, fast delivery and expert service to meet your needs. CIP offers a fully equipped machine shop on location where components can be manufactured to customers' specifications. Our experts provide 24-hour emergency support and are focused on finding solutions. Quotes are provided within as little as an hour, and standard lead time for shipping manufactured parts is three weeks, with the ability to expedite orders.

Industry Edge

In addition to offering customers high quality composites, CIP continues to have the largest size capabilities, offering up to 65 inch diameter tubes, and sheets up to 6 inches thick.

CIP is dedicated to providing the highest quality products with a focus on exceeding requirements. We strive for complete customer satisfaction through continuous improvement in service and quality.

One Group, One Location, Reaching Globally

Exceptional service is achieved with our engineering, sales and production under one roof. Together we provide years of experience and a high level of industry and application knowledge. From sales to logistics, customers turn to us for superior service and support.

Standard Shapes

Tubes

Minimum Bore	1/2 in. (13 mm)
Maximum Bore	65 in. (1651 mm)
Standard Lengths	16 – 24 – 32 inch (406 – 610 – 813 mm)

Sheets

Minimum Thickness	1/8 in. (3 mm)
Maximum Thickness	6 in. (152 mm)
Standard Widths	16 – 24 – 32 in. (406 – 610 – 813 mm)
Standard Lengths	24 – 36 – 48 – 60 in. (610 – 914 – 1219 – 1524 mm)



Manufactured as tubes and sheets, then custom machined to a variety of finished products



Plain bearings (bushings), flange bearings, split bearings, spherical bearings, water lubricated bearings



Thrust washers



Wear pads: curved, segmented, countersunk or counterbore holes



Electrical insulators and thermal insulation



Hydraulic and pneumatic wear rings

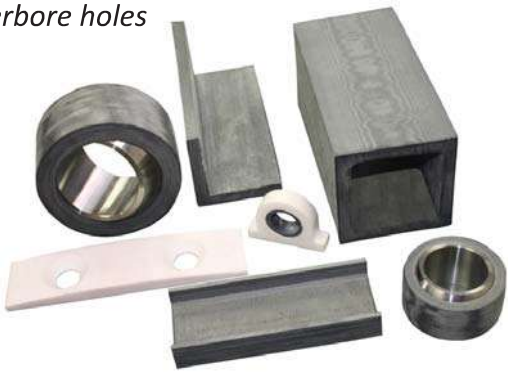

Custom machined components

Benefits

CIP Composites are commonly used to replace more traditional bronze, babbitt, nylon and wood bearing materials. Ideally suited for high load, slow speed applications, CIP Composites are designed to operate without external lubrication, and offer smooth, quiet performance. CIP Composites offer higher load capacity and better dimensional stability than other nonmetallic materials. When high strength, low friction and wear are important, CIP is the clear choice.

Benefits	Advantages
Self-Lubricating	Solid lubricants are dispersed evenly throughout material
100% Bearing Material	Lubricated completely throughout the bearing; no fiberglass or metallic shell
Environmentally Friendly	Eliminates the need to introduce external lubricants such as greases which can be carried away by water or heat
Wet or Dry Running	Capable of operating in fresh or salt water, many chemical solutions, or in dry unlubricated applications
Low Coefficient of Friction	Elimination of stick-slip; better operating efficiency
Low Wear Rate	Highly resistive to wear and abrasion
High Edge Load / High Shock Load Capabilities	Stable where side loading is anticipated, and where slight misalignment is present without damage or fracture
Low Thermal Expansion Rate	Dimensionally stable in high temperatures; predictable expansion
Negligible Water Swell	<0.15% water swell on all products, with the exception of CIP Hydro which is rated at <0.1%
Easy to Machine	Machinable in place, no special tooling required
Chemically Resistant	Chemically resistant to most chemicals, unlike bronze and other materials that can corrode
Nonconducting	Excellent electrical insulators; does not conduct heat or electrical current like metallic materials
Excellent Mechanical Strength	High ultimate strengths; resilient and durable in shock and misaligned loading conditions; absorbs vibrations and load fluctuation
No Abrasive Fillers	No fillers such as calcium carbonate that can scratch mating surfaces
Stable in Elevated Temperatures	Materials available that are stable in temperatures up to 400°F (204°C)

Industries and Applications

CIP Composites can be utilized in a variety of different industries and applications and are not limited to those listed below. Contact us to discuss your application.

Industrial Applications

- Hydraulic Cylinders
- Pneumatic Actuator
- Electrical Actuator
- Pumps
- Food Processing
- Handling Systems
- Crane Systems
- Earth Drilling & Processing
- Material Handling
- Mining Equipment
- Agriculture
- Wood Products











Hydro Applications

- Wicket Gate
- Main Guide
- Linkage
- Servo Motor
- Head Cover
- Operation Ring
- Vertical Gate
- Spillway Trunnion
- Lock/Miter Gate
- Fish Screens

Marine Applications

- Rudder / Pintle
- Stern Tube
- Propeller Shaft
- Fin Stabilizers
- Thrusters
- Fairleads
- Crane Masts / Davits
- Winches / Capstans
- Skidding Pads
- Stern Rollers
- A-Frame / LARS











Oil & Gas Applications

- CALM Buoy
- Fairleads
- Launch & Recovery
- Riser Tensioner
- Iron Roughneck
- Boom / Mast
- Pumpjack
- Winch
- Blowout Preventer
- Pipe Stacker
- Rig Walker

CIP Composites

CIP Composites are laminated polymer materials made by impregnating textiles with thermosetting resins. Solid lubricants are added to the resin to provide evenly dispersed lubrication throughout the material. CIP offers multiple textile, lubrication and resin combinations to provide the most suitable material for your application. Our dedicated team will help you choose which CIP material will best fit your specific application, taking into consideration the type of environment (wet/dry, dirty/caustic), amount of load, speed of moving parts, and temperature among other factors.

CIP Composite materials are represented by
three (3) digits based on the chosen textile, lubricant and resin. For example: CIP151

CIP X X X

Textile		Lubricant			Resin	
1	Polyester	0	None	Electrical or shim applications	1	Standard Polyester
2	PTFE/Polyester Combination	1	Graphite	Dry conditions	2	Marine
3	Meta-Aramid	2	Moly (MoS_2)	Wet conditions	3	High Temperature / Chemical Resistant
		3	PTFE	Wet or dry conditions		
		4	Graphite & PTFE	Dry conditions needing lower friction		
		5	Moly & PTFE	Wet or dry conditions		

Left: Polyester
Middle: PTFE/Polyester
Right: Meta-Aramid





Bottom: Raw tube surface; direct from oven
Middle: Rough turned surface
Top: Finished machined surface

Enhancement A & B

Enhancement A offers lower coefficient of friction, and increased physical properties: machine ability, strength, durability
Enhancement B offers the same as Enhancement A with added reduction of noise and stick slip in oscillating or pivoting applications

CIP Hydro™	Polyester/PTFE Textile Proprietary Lubrication Polyester Resin	Proprietary material made specifically for the hydro industry - tested by Power Tech Labs
CIP Marine™	Polyester Textile Proprietary Lubrication Marine Resin	Proprietary material made specifically for the marine industry - ABS Marine Class Type Approved and RINA Type Approved for Stern Tube and Rudder Bearings
CIP151A	Polyester Textile PTFE & Moly Lubrication Polyester Resin Enhancement A	Wet/dry applications, high loading and slow rotational motion
CIP131	Polyester Textile PTFE Lubrication Polyester Resin	PTFE only, used commonly with hydraulic fluids
CIP121	Polyester Textile Moly Lubrication Polyester Resin	Wet / dry applications, where high shock or edge loading is anticipated, commonly used in general industrial applications
CIP111	Polyester Textile Graphite Lubrication Polyester Resin	Low friction without grease, used primarily in dry environments
CIP101	Polyester Textile No Lubrication Polyester Resin	No lubricants, made for static applications, commonly used as electrical insulators
CIP251A	Polyester/PTFE Textile PTFE & Moly Lubrication Polyester Resin Enhancement A	High load, slow oscillating movements offering a low coefficient of friction
CIP252A	Polyester/PTFE Textile PTFE & Moly Lubrication Marine Resin Enhancement A	Typically used as propeller shaft and rudder bushings; recommended in sand and silty environments
CIP333A	Meta-Aramid Textile PTFE Lubricant High Temperature/ Chemical Resistant Resin	High temperature applications; excellent chemical resistance

Properties

Physical Properties *Tests performed on CIP100 Series sheet material.*

The physical properties of CIP Composites make it an excellent wear and bearing material. As a general guide, this 100% bearing material is best suited for high load, high impact and slow rotating applications. CIP composite bearings and wear pads are a great solution for your current metallic or plastic bearing challenges.

Compressive Strength (ASTM D695)

Ultimate	50,000 PSI	345 MPa
Yield	15,000 PSI	103 MPa
Parallel	13,500 PSI	93 MPa
Modulus	500,000 PSI	447 MPa
Tensile Strength (ASTM D638)	11,000 PSI	75 MPa
Tensile Modulus of Elasticity (ASTM D638)	470,000 PSI	3,240 MPa
Poisson's Ratio (ASTM D3039-08)		0.231
Shear Strength (ASTM D2344)	12,000 PSI	82 MPa
Flexural Modulus of Elasticity (ASTM D790)	260,000 PSI	1,793 MPa
Hardness Rockwell M (ASTM D785)		100
Density (ASTM D792)	0.047 lbs/in^3	1.3g/cm^3
Water Swell (ASTM D570)		<0.15%

Thermal Properties

CIP Composites are thermal insulators and rely on mating metal surfaces to dissipate frictional heat. Although thermal expansion of CIP Composites is greater than that of most metal alloy bearings; it is consistent, predictable, and less than many plastics. CIP offers a variety of material grades to best meet your applications' temperature requirements.

Coefficient of Thermal Expansion

CIP 100 & 200 Series - Operating temperatures -40° to 200° F (-40° to 93° C)

Normal to Laminate	3.5 x 10^{-5} /Δ°F	6.3 x 10^{-5} /Δ°C
Parallel to Laminate	1.8 x 10^{-5} /Δ°F	3.2 x 10^{-5} /Δ°C

CIP 300 Series - Operating temperatures -40° to 400° F (-40° to 204° C)

Normal to Laminate	4.0 x 10^{-5} /Δ°F	7.2 x 10^{-5} /Δ°C
Parallel to Laminate	2.0 x 10^{-5} /Δ°F	3.6 x 10^{-5} /Δ°C

Mechanical Properties

Coefficient of friction varies with application, shaft material, surface finish, load, speed, environment and external lubrication. CIP Composites offer solutions which can eliminate noisy stick-slip problems, extend operating life and reduce wear, making for better operating efficiency.

Coefficient of Friction - Dry Dynamic

CIP 121	0.15 - 0.20
CIP 151	0.13 - 0.15
CIP 251	0.05 - 0.10

Static coefficient of friction is generally very similar to dynamic, even after prolonged periods of rest, where other materials may develop high break-away torque requirements.

Pressure Velocity (PV)

As a general guideline or reference, CIP recommends limiting the PV for 100 series materials to 6000psi-ft/min for continuous duty or industrial applications. Similarly CIP 200 series materials have recommended PV limit of 10,000psi-ft/min. Application factors can affect these PV limits, contact us for a review of your application.

Electrical Properties

Certain grades of CIP Composites are excellent insulating materials and may be used in a number of different electrical applications. Nongraphite materials offer customers both a nonconducting and nonmagnetic composite that does not build up static charges.

Dielectric Strength (ASTM D149-97a) ..... 200 volts / mil
Volume Resistivity (ASTM D257-07) .....$4.2x10^{15}$ ohm-cm

Chemical Resistance

CIP Composites do not corrode and are unaffected by many solvents and chemical solutions. This eliminates many of the problems commonly encountered with metal bearings. For example: chemical wash down procedures which can attack the bearing and strip away lubricating oils. Composites may be attacked by ketones, chlorinated solvents, strong alkalis, and hot strong oxidizing agents. To evaluate chemical compatibility we will generally need to understand chemical concentrations, solution temperatures, and exposure.

	68° F/20° C	120° F/49°C
Acetic Acid 15/100%	S/U	L/U
Acetone 15/100%	S/U	L/U
Alcohol Ethyl 15/100%	S/S	S/S
Aluminum Sulfate	S	S
Ammonia Liquid	U	U
Ammonia Aqueous	U	U
Ammonium Carbonate	S	L
Ammonium Nitrate	S	S
Benzene	S	L
Bleach Liquors	S	L
Calcium Chloride	S	S
Calcium Hydroxide	U	U
Carbon Tetrachloride	S	S
Chlorine Water	S	L
Creosote	S	S
Citric Acid	S	S
Ethylene Glycol	S	S

	68° F/20° C	120° F/49° C
Fatty Acids	S	S
Hydrochloric Acid	S	S
Hydrofluoric Acid	U	U
Maleic Acid	S	S
Naphtha	S	S
Nitric Acid 15/100%	S/U	S/U
Oxalic Acid	S	S
Phosphoric Acid	S	S
Phthalic Anhydride	S	S
Potassium Hydroxide	U	U
Sodium Carbonate 25/100%	S/L	S/U
Sodium Chloride	S	S
Sodium Hydroxide	U	U
Sodium Nitrate	S	S
Sodium Nitrite	S	S
Sulfuric Acid 50/100%	S/U	S/U
Trichloroethylene	U	U

S = Satisfactory L = Satisfactory for limited service U = Unsatisfactory

Satisfactory means that the material retains 50% or more of its original dry strength after immersion of at least six months.

Manufacturing Capabilities

Custom Products

Columbia Industrial Products offers a fully equipped machine shop on location where components can be manufactured to customers' specifications. Our experts provide 24-hour emergency support and are focused on finding solutions.

CIP Composites are manufactured as tubes and sheets, then custom machined to a variety of finished products. Spherical bearings with stainless steel balls, threaded components and many other custom products can be fabricated.

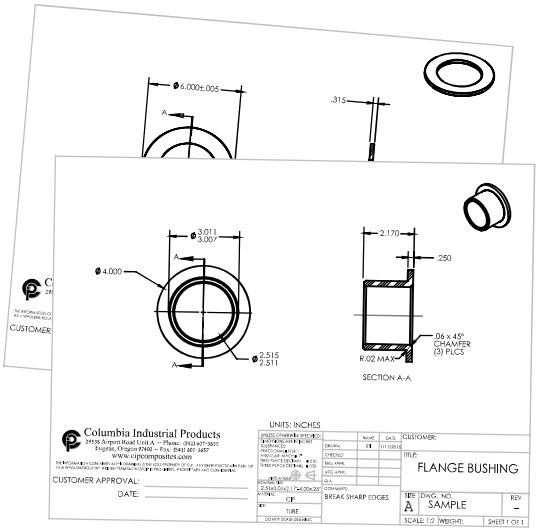

Machining

CIP's 16,000 square feet facility includes state-of-the-art CNC machines, CNC lathes that provide live tooling functionality, and a CNC mill that has 4th axis capability. The CNC router table allows for quick production of sheet parts. Control and programming is provided by MasterCAM X5 software. A complete array of new manual lathes provides capabilities to turn parts up to 65 inch diameters.



CIP places high priority in the continual investment in quality machines, hardware and software to provide cutting edge technology for its workforce. This includes formal training, support services, and equipment maintenance to maximize the transfer of benefits to the finished product. These efforts enable CIP to achieve the high level of efficiency that our markets and customers demand.

Testing Lab

Our on-site material testing lab is key to our ever expanding development of high quality materials. We offer the services of this lab to our customers, allowing project specific testing according to the requirements of their project or needs. Given the various materials' properties, our testing abilities provide specific results in an economical and efficient manner. In 2012, a new 100kN electromechanical tensile/compressive testing machine was added, which is fully computer controlled, providing highly repeatable results, more options for customized testing procedures, and formal reporting.

Machining

CIP Composites are readily machinable by conventional machining techniques. As a general guide they may be treated as they would for soft metals such as aluminum or bronze, but machined (dry) without coolant. CIP materials are nontoxic, although it is advisable to use adequate dust extraction when machining.

For turning, tungsten carbide or diamond tipped tools should be used to obtain a fine finish. High speed steel tools can be used for machining where accuracy below 0.005 inches (0.13 millimeters) is not required and for small quantity production.

Installation Methods



Freeze-Fit Bearings do not become brittle during the freezing process. Liquid nitrogen is the most efficient method; in some cases dry ice or refrigeration may be used. Once bearing is frozen, and outer diameter is smaller than housing, block or hold the bearing in place. As the bearing returns to ambient temperature it will increase in size and the proper interference with the housing will be obtained.



Press-Fit Bearings should be fully supported over their loaded area, with uniform interference fit. A suitable lead-in chamfer should be provided in the housing and on the bearing diameter to assure proper start. The amount of force can be suggested to make sure there is adequate power available.



Mechanically Fasten Shoulders, bolt on rings, other rings, or keepers can be used to prevent the bearing from moving over time. Flat components such as wear pads can be retained by countersunk screws or metal inserts and located by keeper plates where high lateral or shearing loads are anticipated.

Bonding CIP Composites inherently bond well with adhesives. Bearings can be designed for glue-in installation with a minimum clearance of 0.005 inches (0.13 millimeters). During installation, bearings should be retained on top and bottom. Wear pads can be retained with adhesives to many metallic surfaces. We can recommend adhesives.

Counter/Mating Surface

The counter surface finish of the mating operating component has a major effect on the performance of the composite. Surface finish should ideally be 16 – 32 RMS (0.4 – 0.7 µm) RA minimum and HRB 80. Suitable mating materials would be hardened steels or stainless, and surfaces should be free from cutting edges and lubrication grooves or holes.

External Lubrication

CIP Composites can be used with external lubrication if desired. We can custom design bearings and wear pads with lubrication grooves for water, grease or oil. If external lubrication is used, we recommend the use of water or synthetic oils/greases.